STEED
HYDRAULIC TECHNOLOGY

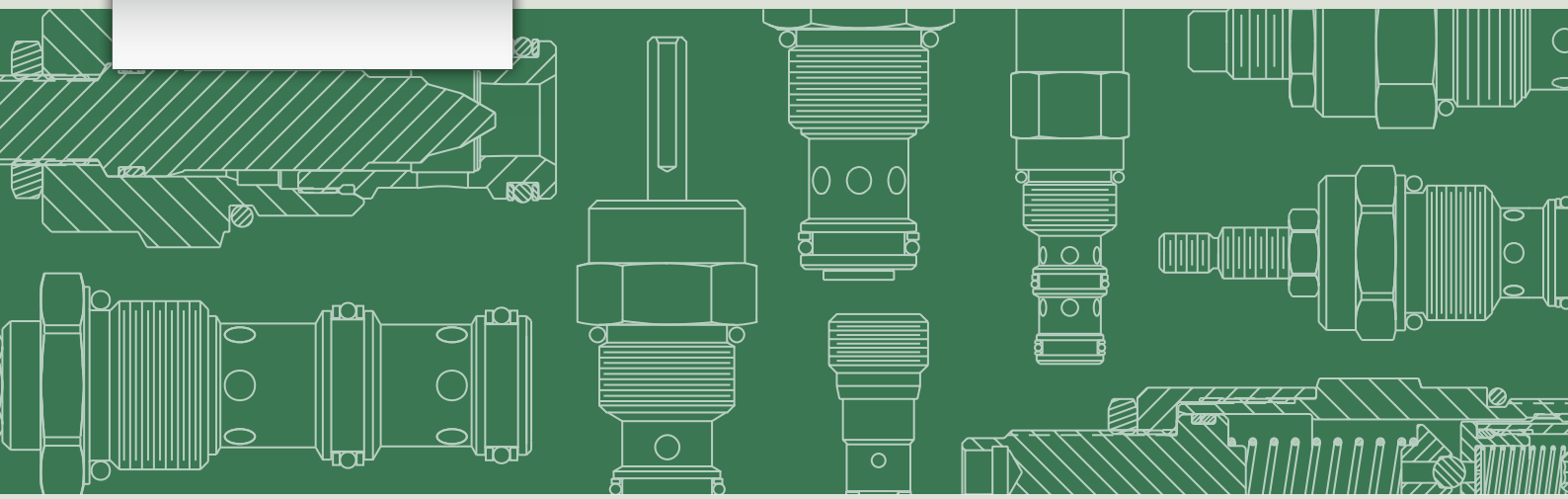

SAE Cavity Cartridge Valve

Pressure Control
Flow Control
Directional
Filter



www.steedmachinery.com.tw

Contents

Index **04**

Pressure Control

Relief Valve Cartridge Direct Acting Poppet Type RV-20 06

Relief Valve Cartridge Direct Acting Differential Area Poppet Type RV-22 08

Pilot Operated Relief Valve RV-26 10

Bi-directional, Poppet Type Relief Valve CR-28 12

Pressure Reducing / Relieving Cartridge Valve PR-32 14

Pressure Reducing / Relieving, Pilot-Operated PR-36 16

Logic Element DPS2-10 18

Flow Control

Flow Control Valve FC-20 20

Needle Valve NV-20 22

Adjustable Pressure Compensated Priority Flow Regulator Valve Cartridge FR-33 24

Adjustable Pressure Compensated Flow Regulator Valve Cartridge FR-39 26

2-Way Flow Regulator, Pressure Compensated, Not Adjustable VSK2 28

Directional

Check Valve, Ball Type CV04-20 30

Check Valve, Ball Type CV-20 32

Check Valve, Poppet Type CV-21 34

Load Shuttle Valve LS-30 36

Manual Rotary 3 Way, 2 Position Directional Valve MR-31 38

Check Valve, Pilot-to-Open PC-30 40

Check Valve, Pilot-to-Open, 2:1 Pilot Ratio PC-32 42

Dual Pilot Operated Check Valve DC-40 44

Pressure Compensator PCS4-10 46

Filter

..... SC-20 48

..... CF10 50

..... CF12 52

Index

PRESSURE CONTROL

Page No.	Function	Symbols	Model No.	Cavity	Operating Pressure (bar)	Flow (l/min)
06	Relief Valve Cartridge Direct Acting Poppet Type	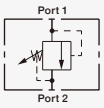	RV08-20	SAE-08-2	276	22.7
			RV10-20	SAE-10-2	228	37.9
08	Relief Valve Cartridge Direct Acting Differential Area Poppet Type	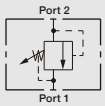	RV08-22	SAE-08-2	248	30.2
			RV10-22	SAE-10-2	241	113.6
10	Pilot Operated Relief Valve	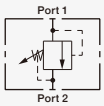	RV10-26	SAE-10-2	240	113.6
			RV12-26	SAE-12-2	240	189.3
			RV16-26	SAE-16-2	276	302.8
12	Bi-directional, Poppet Type Relief Valve		CR08-28	SAE-08-2	350	37
			CR10-28	SAE-10-2	350	75
14	Pressure Reducing / Relieving Cartridge Valve	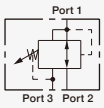	PR08-32	SAE-08-3	240	11.4
			PR10-32	SAE-10-3	207	30.2
16	Pressure Reducing / Relieving, Pilot-Operated	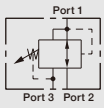	PR10-36	SAE-10-3	210	56
18	Logic Element	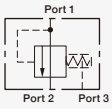	DPS2-10	C-10-3S	290	60

FLOW CONTROL VALVE

Page No.	Function	Symbols	Model No.	Cavity	Operating Pressure (bar)	Flow (l/min)
20	Flow Control Valve	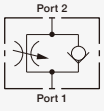	FC10-20	SAE-10-2	240	45
22	Needle Valve	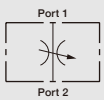	NV08-20	SAE-08-2	240	42
			NV10-20	SAE-10-2	240	45
			NV12-20	SAE-12-2	240	113.6
24	Adjustable Pressure Compensated Priority Flow Regulator Valve Cartridge	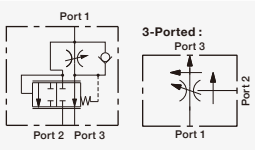	FR12-33	SAE-12-3	240	3-ported : 0 ~ 68 2-ported : 0 ~ 45

Page No.	Function	Symbols	Model No.	Cavity	Operating Pressure (bar)	Flow (l/min)
26	Adjustable Pressure Compensated Flow Regulator Valve Cartridge	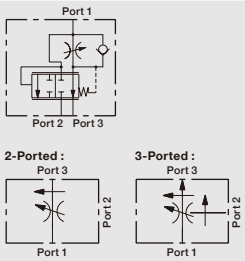	FR10-39	SAE-10-3	240	3-ported : 0 ~ 38 2-ported : 0 ~ 34
28	2-Way Flow Regulator, Pressure Compensated, Not Adjustable		VSK2-M2	M18 * 1.5	320	15

DIRECTIONAL

Page No.	Function	Symbols	Model No.	Cavity	Operating Pressure (bar)	Flow (l/min)
30	Check Valve, Ball Type	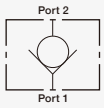	CV04-B20	SAE-04-2	240	5.7
			CV04-20	SAE-04-2	240	5.7
32	Check Valve, Ball Type	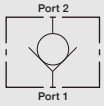	CV08-20	SAE-08-2	240	30
			CV10-20	SAE-10-2	240	76
			CV12-20	SAE-12-2	240	95
			CV16-20	SAE-16-2	240	151
34	Check Valve, Poppet Type	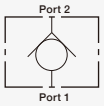	CV08-21	SAE-08-2	210	30.2
			CV10-21	SAE-10-2	210	56
			CV12-21	SAE-12-2	240	113.6
36	Load Shuttle Valve	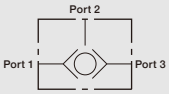	LS04-B30	SAE-04-3	240	4.8
			LS08-30	SAE-08-3	240	18.9
			LS10-30	SAE-10-3	240	30.2
40	Check Valve, Pilot-to-Open	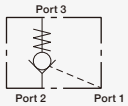	PC08-30	SAE-08-3	240	28.3
			PC10-30	SAE-10-3	240	30.2
42	Check Valve, Pilot-to-Open, 2:1 Pilot Ratio	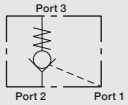	PC10-32	SAE-10-3	240	30.2
44	Dual Pilot Operated Check Valve	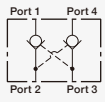	DC08-40	SAE-08-4	240	19
44	Dual Pilot Operated Check Valve	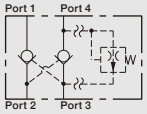	DC10-40	SAE-10-4	240	30.3
46	Pressure Compensator	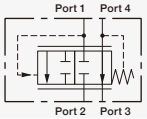	PCS4-10	SAE-10-4	210	38

RV-20



SYMBOLS

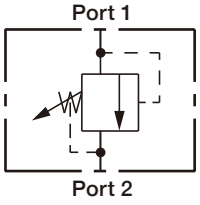

ORDER CODES

RV 08 H - 20 - N - 18

1	Model Name	RV-20	
2	Valve Size	08, 10	
3	Adjustment Option	A	1/4" Hex allen head
		B	1 1/2" dia alum. knob
		H	factory preset hidden adj.
4	Material of Seal	N	buna-N
		V	viton
		E	EPDM
		H	HNBR
		U	polyurethane

5 ▸ Spring Range

RV08-20		RV10-20	
05	3.45 ~ 41.4 ±6.9bar (50 ~ 600 ±100psi)	06	3.45 ~ 41.38bar (50 ~ 600psi)
09	6.90 ~ 89.6 ±13.8bar (100 ~ 1300 ±200psi)	12	10.34 ~ 82.76bar (150 ~ 1200psi)
18	17.24 ~ 179.3 ±20.7bar (250 ~ 2600 ±300psi)	23	17.24 ~ 158.62bar (250 ~ 2300psi)
33	17.24 ~ 278.8 ±27.6bar (250 ~ 4000 ±400psi	33	17.24 ~ 227.59bar (250 ~ 3300psi)

MODEL SPEC.

Model	Cavity	Operating Pressure (bar)	Proof Pressure (bar)	Flow (l/min)	Internal Leakage (cc/min)	Installation Torque (Nm)	Weight (kg)
RV08-20	SAE-08-2	276	483	22.7	0.25	25.8 - 28.5	0.22
RV10-20	SAE-10-2	228	517	37.9	0.25	33.9	0.235

* Operating temperature : -40 ~ 120°C (-40 ~ 248°F)

PERFORMANCE CURVES

▸ Pressure Rise

* 32cSt / 150 ssu oil at 40°C

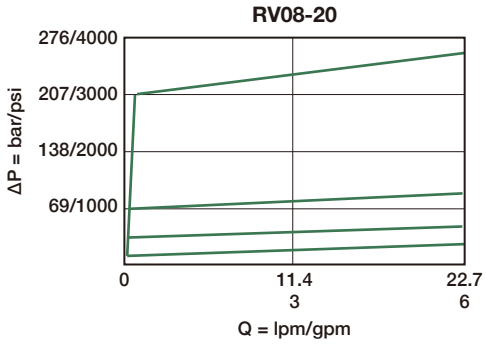

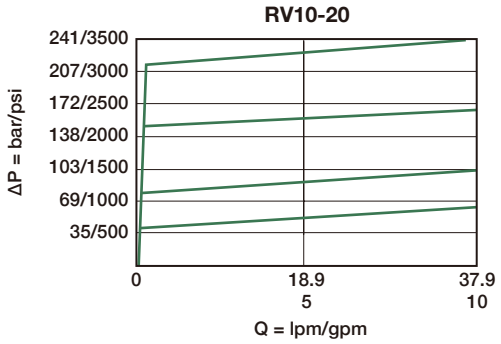

DIMENSION

(UNIT : mm)

▸ RV08-20

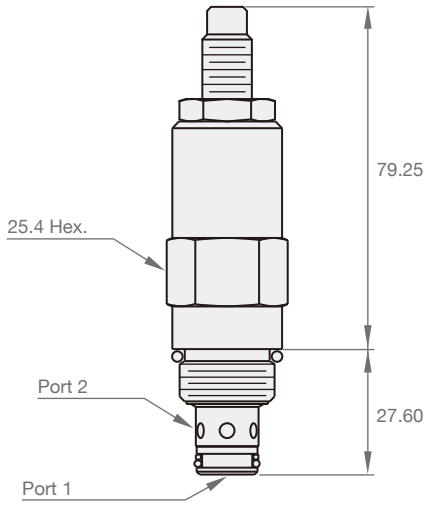

▸ RV10-20

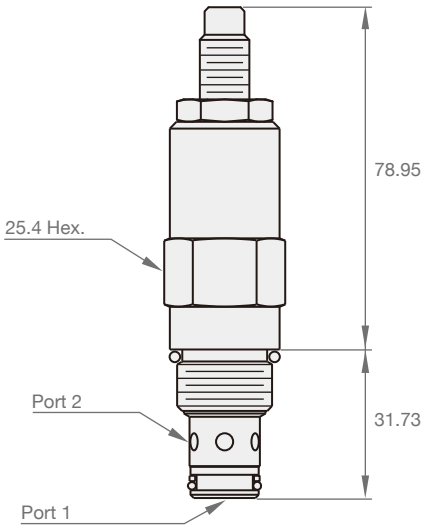

RV-22



SYMBOLS

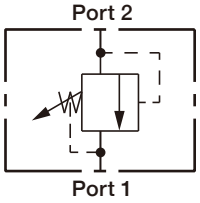

ORDER CODES

RV 10 A - 22 - N - 25
1 2 3 1 4 5

1 ▸ Model Name	RV-22		
2 ▸ Valve Size	08, 10		
3 ▸ Adjustment Option	A	1/4" Hex allen head	
	B	1 1/2" dia alum. knob	
4 ▸ Material of Seal	N	buna-N	
	V	viton	
	E	EPDM	
	H	HNBR	
	U	polyurethane	

5 ▸ Spring Range

RV08-22		RV10-22	
04	3.4 ~ 27.6bar (50 ~ 400psi)	06	10.34 ~ 41.38bar (150 ~ 600psi)
07	6.9 ~ 62.1bar (100 ~ 900psi)	12	10.34 ~ 89.66bar (150 ~ 1300psi)
13	6.9 ~ 117.2bar (100 ~ 1700psi)	25	25.86 ~ 165.52bar (375 ~ 2400psi)
26	17.2 ~ 220.7bar (250 ~ 3200psi)	35	17.24 ~ 241.38bar (250 ~ 3500psi)

MODEL SPEC.

Model	Cavity	Operating Pressure (bar)	Proof Pressure (bar)	Flow (l/min)	Internal Leakage (cc/min)	Installation Torque (Nm)	Weight (kg)
RV08-22	SAE-08-2	248	483	30.2	0.25	27.1	0.22
RV10-22	SAE-10-2	241	517	113.6	0.25	33.9	0.235

* Operating temperature : -40 ~ 120°C (-40 ~ 248°F)

PERFORMANCE CURVES

▸ Pressure Rise

* 32cSt / 150 ssu oil at 40°C

RV08-22

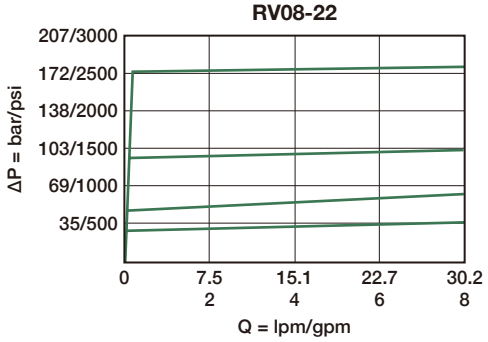

RV10-22

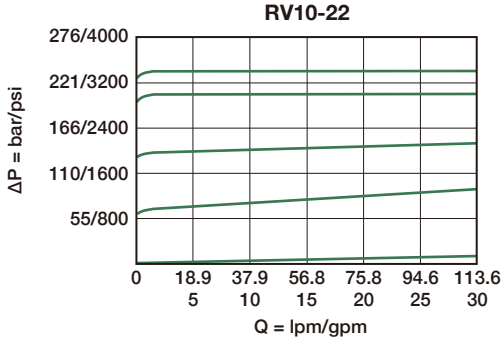

DIMENSION

(UNIT : mm)

▸ RV08-22

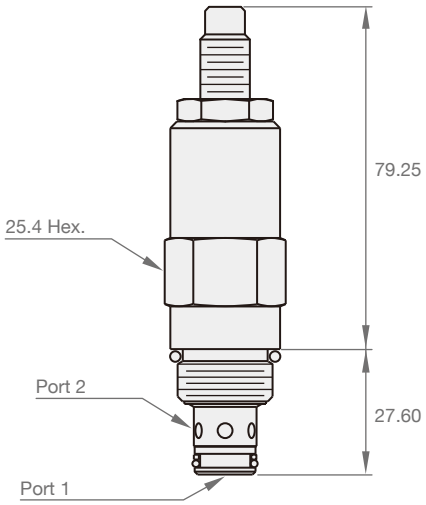

▸ RV10-22

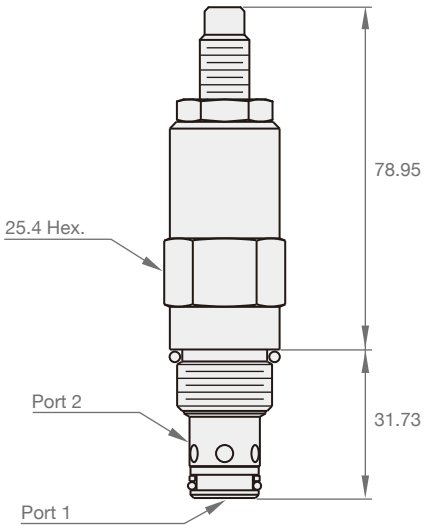

RV-26



SYMBOLS

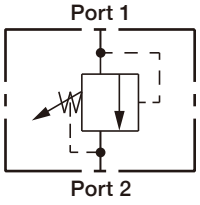

ORDER CODES

RV ① 10 ② A ③ - 26 ① - N ④ - 30 ⑤

①	Model Name	RV-26	
②	Valve Size	10, 12, 16	
③	Adjustment Option	A	1/4" Hex allen head
		B	1 1/2" dia alum. knob
④	Material of Seal	N	buna-N
		V	viton
		E	EPDM
		H	HNBR
		U	polyurethane

⑤ Spring Range

RV10-26		RV12-26		RV16-26	
04	6.9 ~ 27.6bar (100 ~ 400psi)	04	6.9 ~ 27.6bar (100 ~ 400psi)	03	9.7 ~ 20.7bar (140 ~ 300psi)
15	10.3 ~ 103.4bar (150 ~ 1500psi)	15	3.8 ~ 110.3bar (200 ~ 1600psi)	06	15.9 ~ 41.4bar (230 ~ 600psi)
30	27.6 ~ 206.9bar (400 ~ 3000psi)	30	31.0 ~ 206.9bar (450 ~ 3000psi)	15	36.6 ~ 103.5bar (530 ~ 1500psi)
		35	34.5 ~ 241.4bar (500 ~ 3500psi)	35	82.8 ~ 241.6bar (1200 ~ 3500psi)

MODEL SPEC.

Model	Cavity	Operating Pressure (bar)	Proof Pressure (bar)	Flow (l/min)	Internal Leakage (l/min)	Installation Torque (Nm)	Weight (kg)
RV10-26	SAE-10-2	240	420	113.6	115	33.9	0.23
RV12-26	SAE-12-2	240	420	189.3	115	40.6	0.345
RV16-26	SAE-16-2	276	420	302.8	115	67.7	0.56

* Operating temperature : -40 ~ 120°C (-40 ~ 248°F)

PERFORMANCE CURVES

▸ Pressure Rise

Port 1 → Port 2

* 32cSt / 150 ssu oil at 40°C

RV10-26

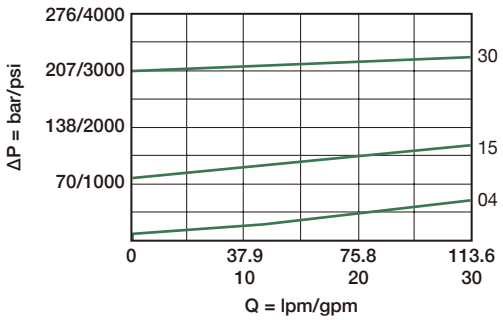

RV12-26

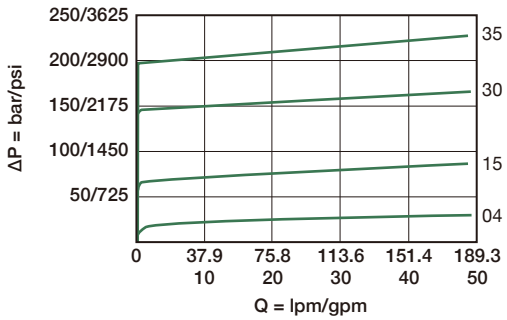

RV16-26

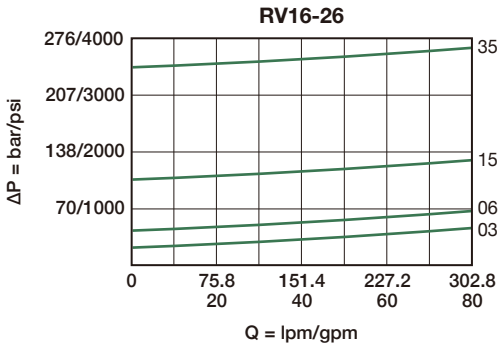

DIMENSION

(UNIT : mm)

▸ RV10-26

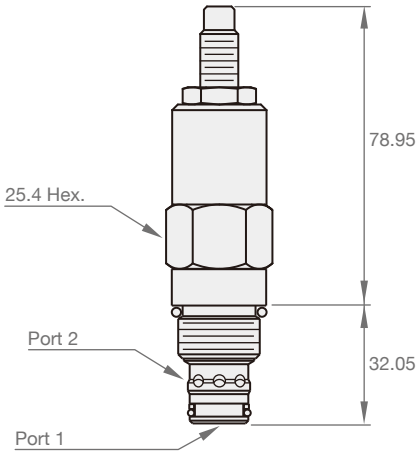

▸ RV12-26

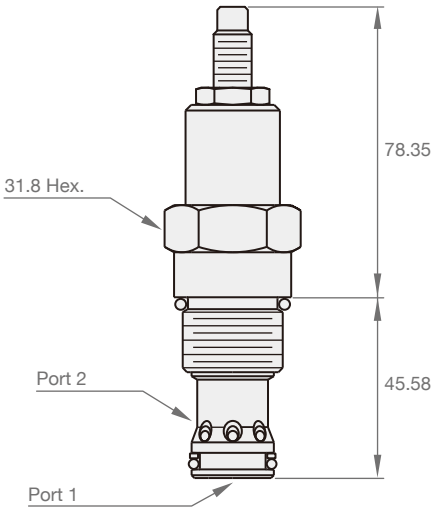

▸ RV16-26

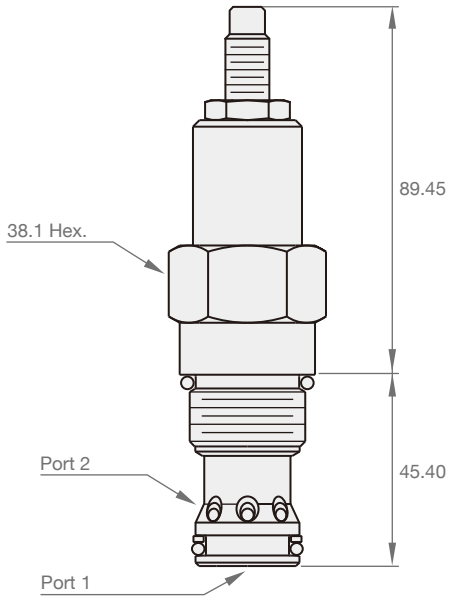

CR-28



SYMBOLS

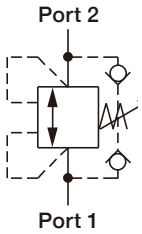

ORDER CODES

CR ① 08 ② A ③ - 28 ① - N ④ - 15 ⑤

①	Model Name	CR-28	
②	Valve Size	08, 10	
③	Adjustment Option	A	1/4" Hex allen head
		B	1 1/2" dia alum. knob
④	Material of Seal	N	buna-N
		V	viton
		E	EPDM
		H	HNBR
		U	polyurethane
⑤	Spring Range	15	6.9 ~ 103.4bar (100 ~ 1500psi)
		30	51.7 ~ 206.9bar (750 ~ 3000psi)
		50	103.4 ~ 344.8bar (1500 ~ 5000psi)

MODEL SPEC.

Model	Cavity	Operating Pressure (bar)	Proof Pressure (bar)	Flow (l/min)	Internal Leakage (cc/min)	Installation Torque (Nm)	Weight (kg)
CR08-28	SAE-08-2	350	420	37	85	27.1	0.22
CR10-28	SAE-10-2	350	420	75	85	33.9	0.18

* Operating temperature : -40 ~ 120°C (-40 ~ 248°F)

PERFORMANCE CURVES

▸ Pressure Rise

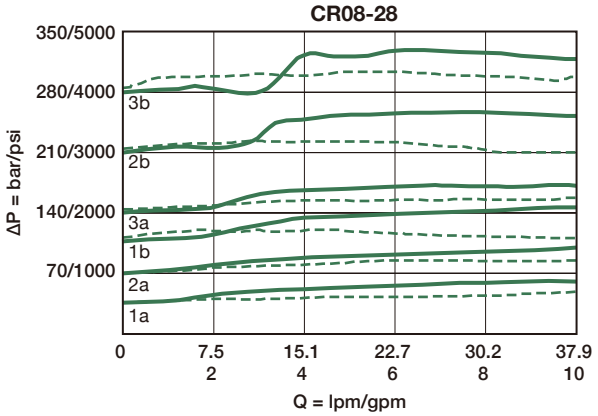

Port 1 → Port 2

Port 2 → Port 1

3b = 5000psi - P_N 4000psi (275bar)

3a = 5000psi - P_N 2000psi (137bar)

2b = 3000psi - P_N 3000psi (206bar)

2a = 3000psi - P_N 1000psi (68bar)

1b = 1500psi - P_N 1500psi (103bar)

1a = 1500psi - P_N 500psi (34bar)

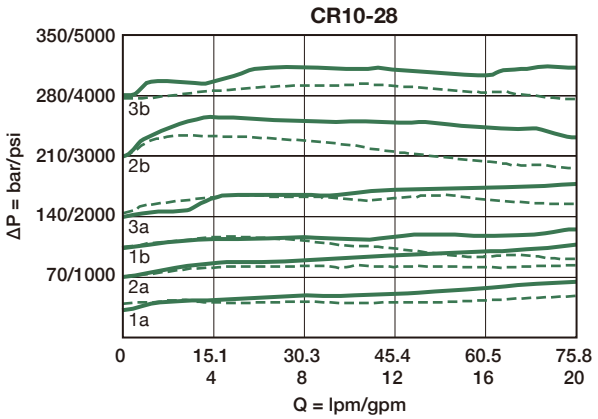

Port 1 → Port 2

Port 2 → Port 1

3b = 5000psi - P_N 4000psi (275bar)

3a = 5000psi - P_N 2000psi (137bar)

2b = 3000psi - P_N 3000psi (206bar)

2a = 3000psi - P_N 1000psi (68bar)

1b = 1500psi - P_N 1500psi (103bar)

1a = 1500psi - P_N 500psi (34bar)

* 33cSt / 150 ssu oil

DIMENSION

(UNIT : mm)

▸ CR08-28

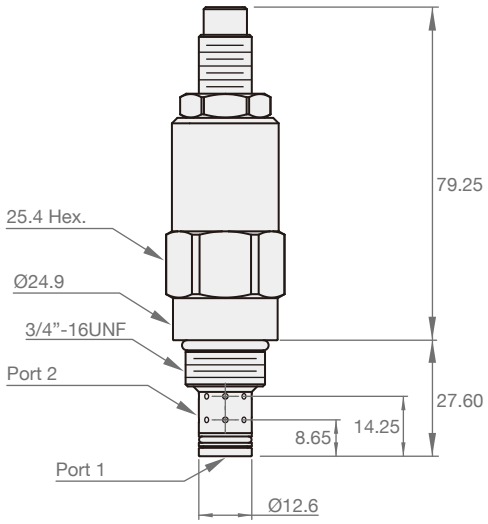

▸ CR10-28

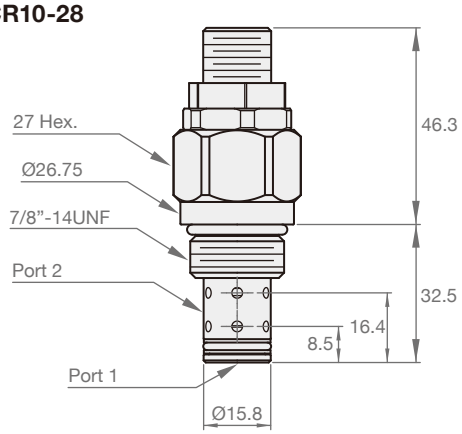

PR-32



SYMBOLS

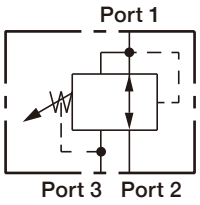

ORDER CODES

PR 10 A - 32 - N - 15

① ② ③ ① ④ ⑤

① Model Name	PR-32		
② Valve Size	08, 10		
③ Adjustment Option	A	1/4" Hex allen head	
	B	1 1/2" dia alum. knob	
④ Material of Seal	N	buna-N	
	V	viton	
	E	EPDM	
	H	HNBR	
	U	polyurethane	

⑤ Spring Range

PR08-32		PR10-32	
03	3.4 ~ 20.7bar (50 ~ 300psi)	04	5.5 ~ 27.6bar (80 ~ 400psi)
06	10.4 ~ 41.4bar (150 ~ 600psi)	08	13.8 ~ 55.2bar (200 ~ 800psi)
12	20.7 ~ 82.8bar (300 ~ 1200psi)	15	20.7 ~ 103bar (300 ~ 1500psi)
22	34.5 ~ 151.7bar (500 ~ 2200psi)	21	27.6 ~ 145bar (400 ~ 2100psi)

MODEL SPEC.

Model	Cavity	Operating Pressure (bar)	Proof Pressure (bar)	Flow (l/min)	Internal Leakage (cc/min)	Installation Torque (Nm)	Weight (kg)
PR08-32	SAE-08-3	240	390	11.4	82*1	27.1	0.23
PR10-32	SAE-10-3	207	517	30.2	82*1	33.9	0.25

*1. Port2 to Port3, setting 206.8bar

* Operating temperature : -40 ~ 120°C (-40 ~ 248°F)

PERFORMANCE CURVES

▸ Pressure Rise

* 32cSt / 150 ssu oil at 40°C

PR08-32

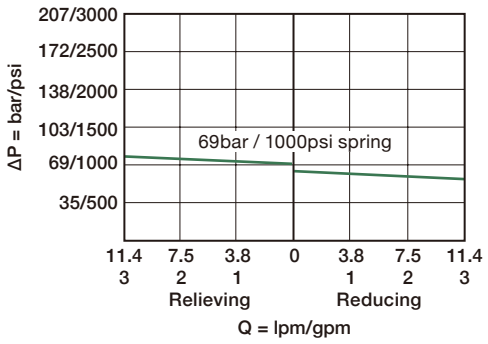

PR10-32

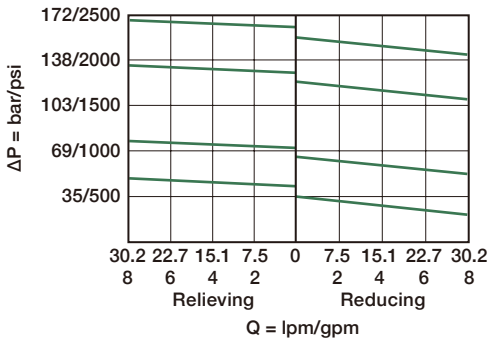

DIMENSION (UNIT : mm)

▸ PR08-32

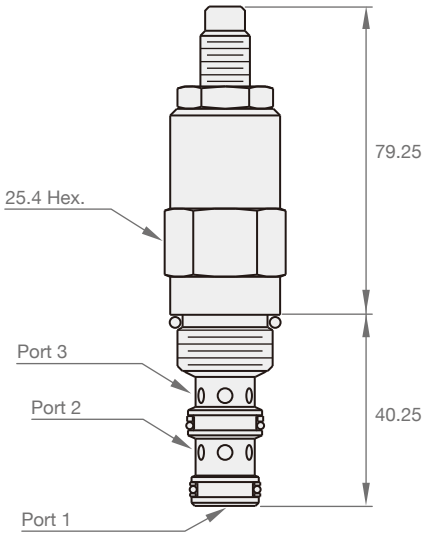

▸ PR10-32

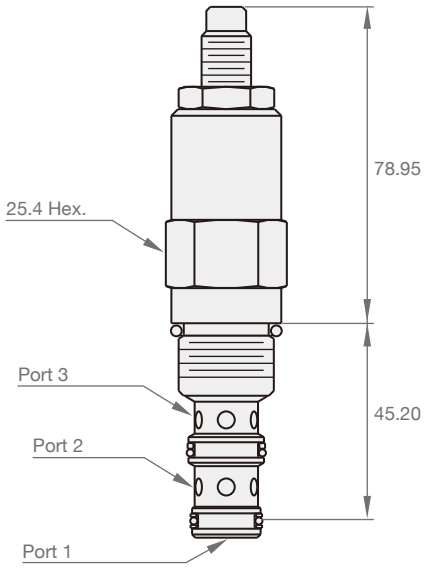

PR-36



SYMBOLS

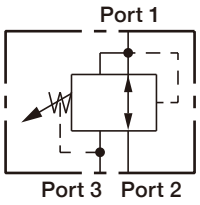

ORDER CODES

PR 10 A - 36 - N - 15

① ② ③ ① ④ ⑤

①	Model Name	PR-36	
②	Valve Size	10	
③	Adjustment Option	A	1/4" Hex allen head
		B	1 1/2" dia alum. knob
④	Material of Seal	N	buna-N
		V	viton
		E	EPDM
		H	HNBR
		U	polyurethane

⑤ Spring Range

PR10-36	
04	6.9 ~ 27.6bar (100 ~ 400psi)
15	10.3 ~ 103.4bar (150 ~ 1500psi)
30	27.6 ~ 206.9bar (400 ~ 3000psi)

MODEL SPEC.

Model	Cavity	Operating Pressure (bar)	Proof Pressure (bar)	Flow (l/min)	Internal Leakage (l/min)	Installation Torque (Nm)	Weight (kg)
PR10-36	SAE-10-3	210	390	56	0.17	33.9	0.24

* Operating temperature : -40 ~ 120°C (-40 ~ 248°F)

PERFORMANCE CURVES

▸ Pressure Rise

* 32cSt / 150 ssu oil at 40°C

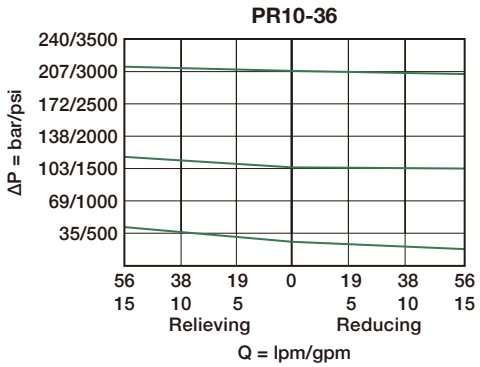

DIMENSION

(UNIT : mm)

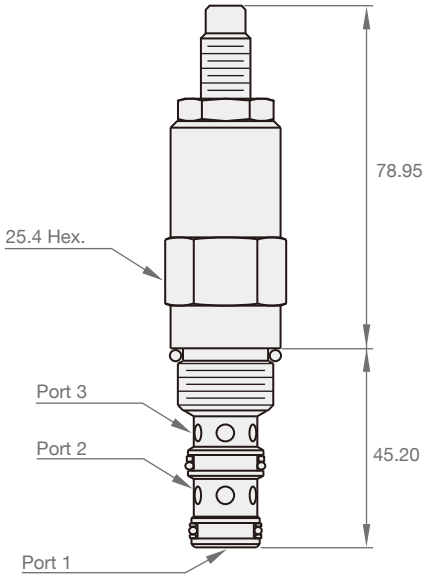

DPS2-10



SYMBOLS

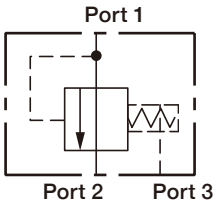

ORDER CODES

DPS2 - 10 - P - F - 080

1	Model Name	DPS2	
2	Valve Size	10	
3	Function	P	spool, N/C (L/S element)
4	Adjustment Option	F	unadjustable
5	Differential Pressure	080	5.5bar (80psi)

MODEL SPEC.

Model	Cavity	Operating Pressure (bar)	Rated Flow (l/min)	Pilot Ratio	Internal Leakage (cm^3/min.)	Installation Torque (Nm)	Weight (kg)
DPS2-10	C-10-3S	290	60	1 : 1	82 @ 290bar	100	0.14

* Operating temperature : -40 ~ 120°C (-40 ~ 248°F)

PERFORMANCE CURVES

▸ Pressure Drop

* 21.8cSt oil at 49°C

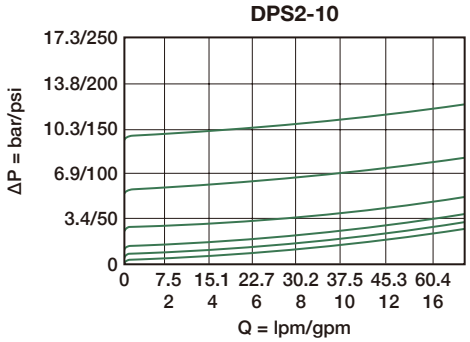

DIMENSION

(UNIT : mm)

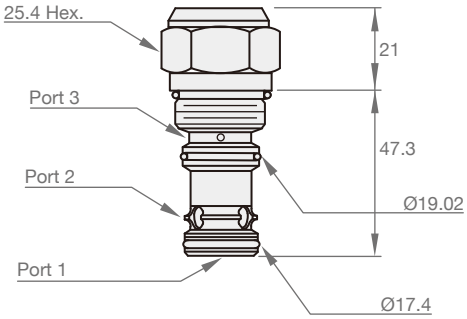

FC-20



SYMBOLS

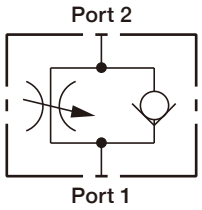

ORDER CODES

FC	10	A	-	20	-	N
1	2	3		1		4

1 ▸	Model Name	FC-20	
2 ▸	Valve Size	10	
3 ▸	Adjustment Option	A	1/4" Hex allen head
		B	1 1/2" dia alum. knob
4 ▸	Material of Seal	N	buna-N
		V	viton
		E	EPDM
		H	HNBR
		U	polyurethane

MODEL SPEC.

Model	Cavity	Operating Pressure (bar)	Proof Pressure (bar)	Flow (l/min)	Internal Leakage (cc/min)	Installation Torque (Nm)	Weight (kg)
FC10-20	SAE-10-2	240	345	45	0.50	33.9	0.145

* Operating temperature : -40 ~ 120°C (-40 ~ 248°F)

PERFORMANCE CURVES

▸ Pressure Drop

——— full open

– – – – rev. flow

* 32cSt / 150 ssu oil at 40°C

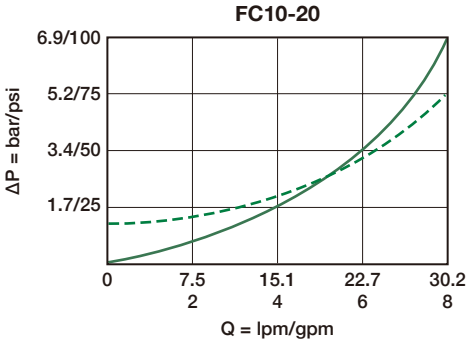

DIMENSION

(UNIT : mm)

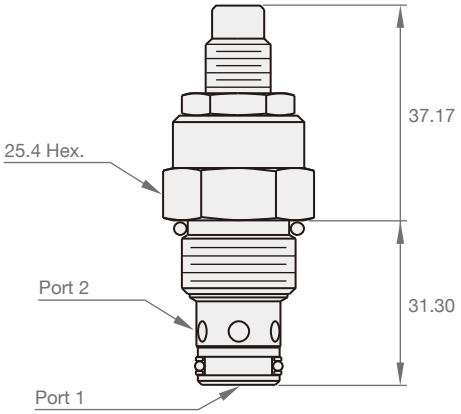

NV-20



SYMBOLS

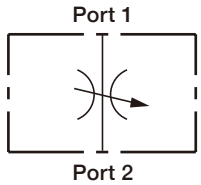

ORDER CODES

NV 08 A - 20 - N

1	Model Name	NV-20	
2	Valve Size	08, 10, 12	
3	Adjustment Option	A	1/4" Hex allen head
		B	1 1/2" dia alum. knob
4	Material of Seal	N	buna-N
		V	viton
		E	EPDM
		H	HNBR
		U	polyurethane

MODEL SPEC.

Model	Cavity	Operating Pressure (bar)	Proof Pressure (bar)	Flow (l/min)	Internal Leakage (cc/min)	Installation Torque (Nm)	Weight (kg)
NV08-20	SAE-08-2	240	345	42	0.32	27.1	0.115
NV10-20	SAE-10-2	240	345	45	0.05	33.9	0.145
NV12-20	SAE-12-2	240	345	113.6	0.15	47.4	0.3

* Operating temperature : -40 ~ 120°C (-40 ~ 248°F)

PERFORMANCE CURVES

▸ Pressure Drop

Full Open Port 2 → Port 1 or Port 1 → Port 2

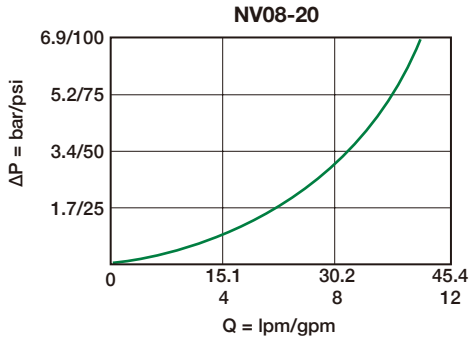

▸ Pressure Drop

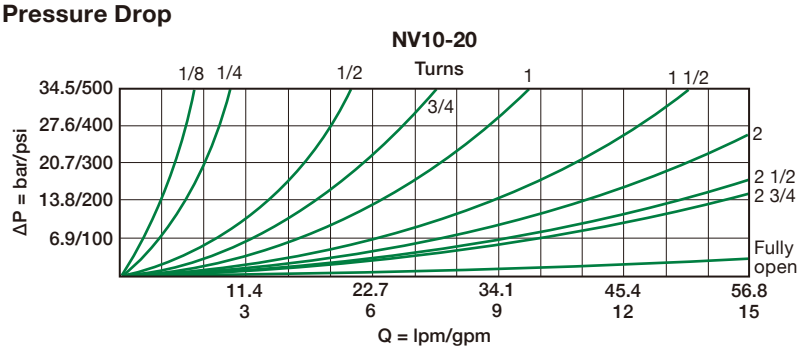

▸ Flow vs. Turns

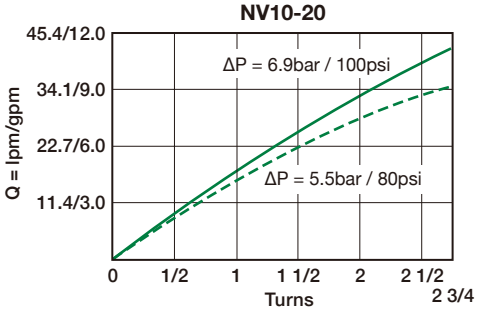

▸ Pressure Drop

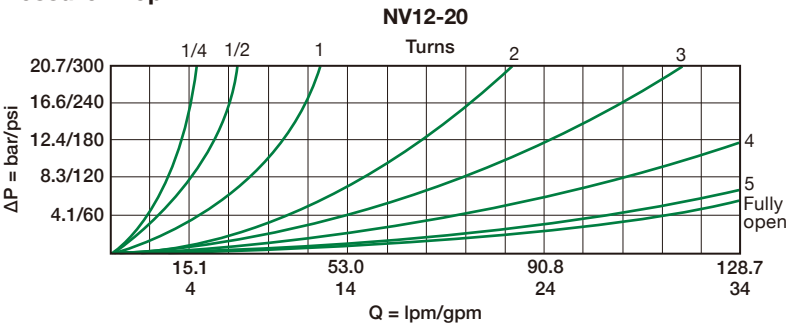

▸ Flow vs. Turns

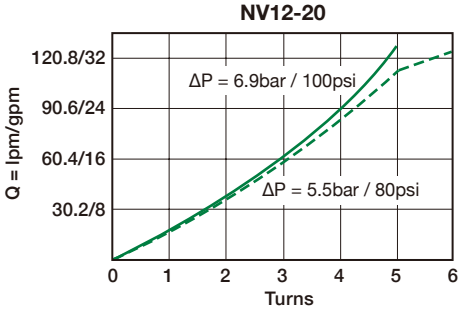

* 32cSt / 150 ssu oil at 40°C

DIMENSION

(UNIT : mm)

▸ NV08-20

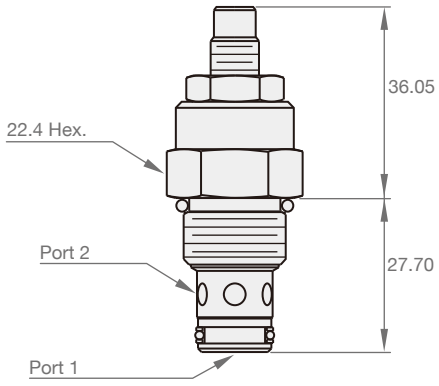

▸ NV10-20

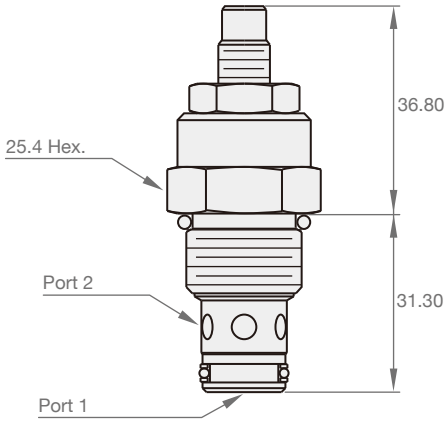

▸ NV12-20

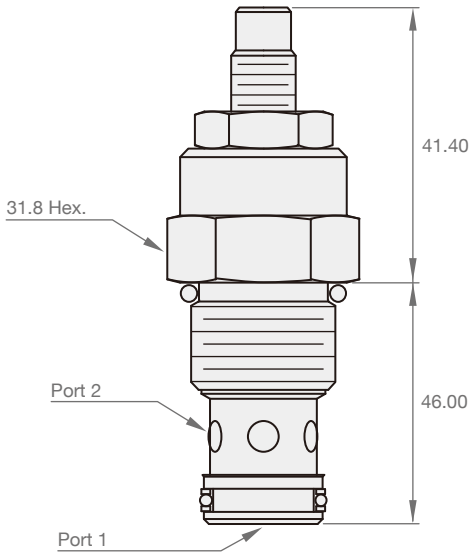

FR-33



SYMBOLS

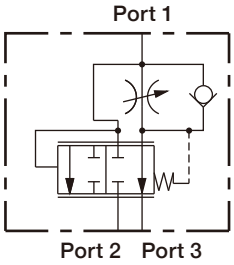

3-Ported :

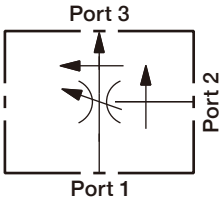

ORDER CODES

FR 12 A - 33 - N

1	Model Name	FR-33	
2	Valve Size	12	
3	Adjustment Option	A	1/4" Hex allen head
		B	1 1/2" dia alum. knob
4	Material of Seal	N	buna-N
		V	viton
		E	EPDM
		H	HNBR
		U	polyurethane

MODEL SPEC.

Model	Cavity	Operating Pressure (bar)	Proof Pressure (bar)	Flow (l/min)	Internal Leakage (l/min)	Installation Torque (Nm)	Weight (kg)
FR12-33	SAE-12-3	240	345	3-ported : 0 ~ 68 2-ported : 0 ~ 45	0.12 *1	47	0.235

*1. at Port3, setting 206.8bar
* Operating temperature : -40 ~ 120°C (-40 ~ 248°F)

PERFORMANCE CURVES

▸ Flow vs. Turns

103bar / 1500psi

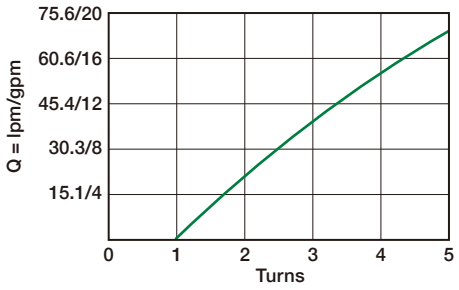

▸ Pressure Drop vs. Reverse Flow

Port 3 → Port 1

240bar / 3500psi Inlet Pressure

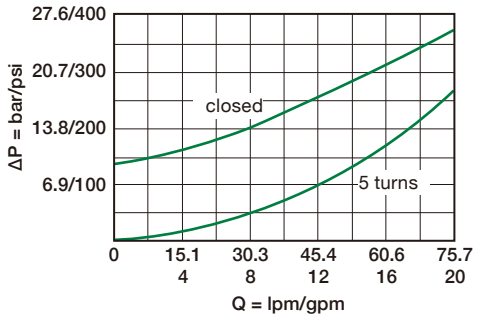

▸ Regulated Flow vs. Pressure

at 76lpm / 20gpm Input Flow

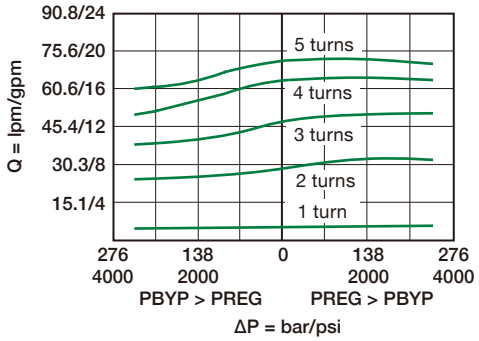

* 32cSt / 150 ssu oil at 40°C

DIMENSION

(UNIT : mm)

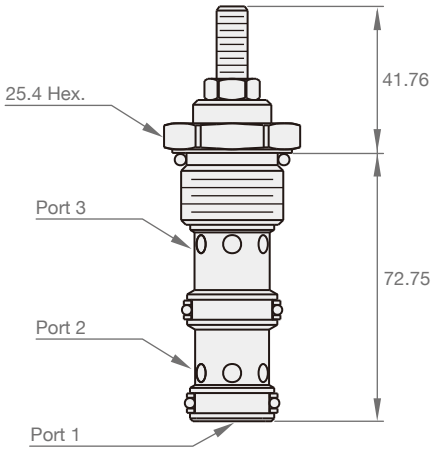

FR-39



SYMBOLS

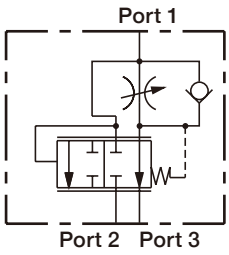

2-Ported :

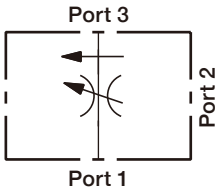

3-Ported :

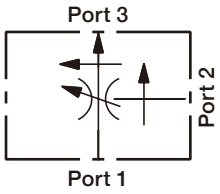

ORDER CODES

FR	10	A	-	39	-	N
①	②	③		①		④

①	Model Name	FR10-39	
②	Valve Size	10	
③	Adjustment Option	A	1/4" Hex allen head
		B	1 1/2" dia alum. knob
④	Material of Seal	N	buna-N
		V	viton
		E	EPDM
		H	HNBR
		U	polyurethane

MODEL SPEC.

Model	Cavity	Operating Pressure (bar)	Proof Pressure (bar)	Flow (l/min)	Internal Leakage (l/min)	Installation Torque (Nm)	Weight (kg)
FR10-39	SAE-10-3	240	345	3-ported : 0 ~ 38 2-ported : 0 ~ 34	0.38	33.9	0.135

* Operating temperature : -40 ~ 120°C (-40 ~ 248°F)

PERFORMANCE CURVES

▸ Regulated Flow vs. Turns

103bar / 1500psi at Port 3
2-Ported : at 123bar / 1800psi inlet pressure
3-Ported : at 38lpm / 10gpm inlet flow

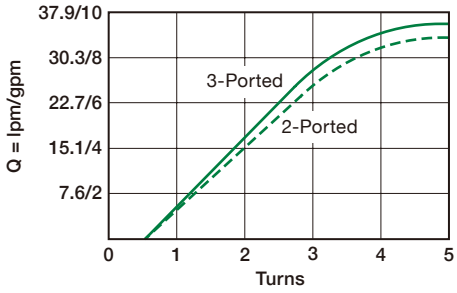

▸ Pressure Drop vs. Reverse Flow

Port 3 → Port 1
34.5bar / 500psi Inlet Pressure

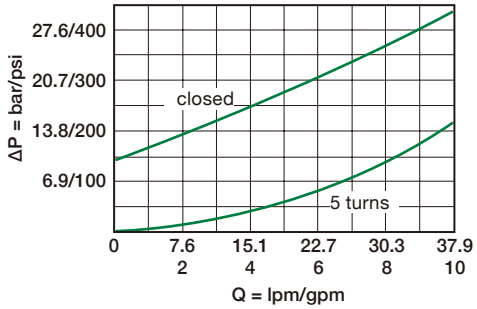

▸ 2-Ported Regulated Flow vs. Pressure Drop

at 240bar / 3500psi Inlet

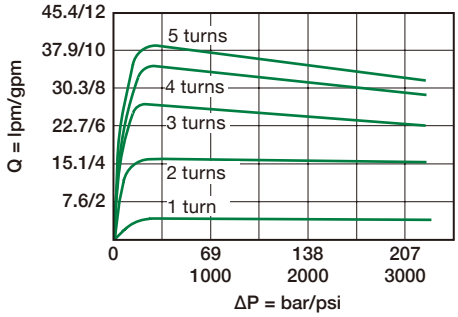

▸ 3-Ported Regulated Flow vs. Load

at 38lpm / 10gpm Inlet

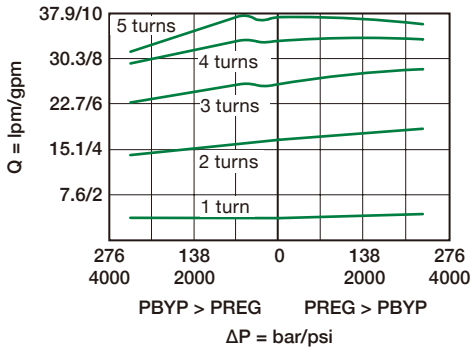

* 32cSt / 150 ssu oil at 40°C

DIMENSION

(UNIT : mm)

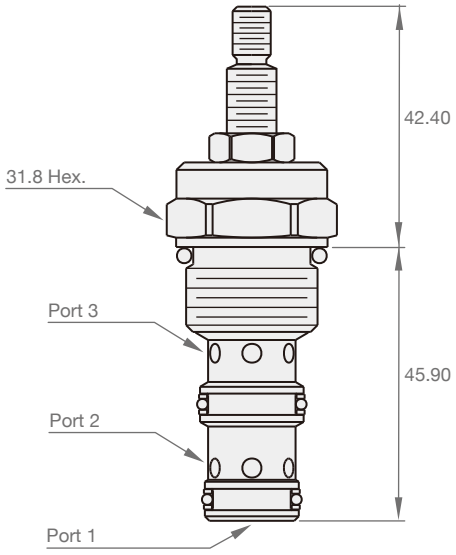

VSK2







SYMBOLS

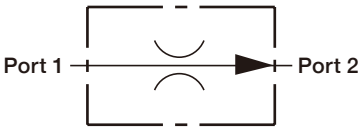

ORDER CODES

VSK ① | 2 ② - M2 ③ - 100 ④

①	Model Name	VSK	
②	Valve Size	2	screw-in cartridge
③	Cavity	M2	M18 * 1.5
④	Orifice Diameter (mm/100)	55, 80, 100, 120, 160, 180, 210, 230, 260	

MODEL SPEC.

Model	Cavity	Operating Pressure (bar)	Flow (l/min)	Weight (kg)
VSK2-M2	M18 * 1.5	320	15	0.025

* Operating temperature : -30 ~ 120°C (-22 ~ 248°F)

Approximate Flow Rates Corresponding to Orifice Diameter			
Orifice Diameter (mm/100)	Flow Range at 32bar *2 (l/min)	Orifice Diameter (mm/100)	Flow Range at 32bar *2 (l/min)
55	0.3 ~ 0.6	**180**	5.6 ~ 7.1
80	1.4 ~ 1.7	**210**	8.5 ~ 10.8
100	1.8 ~ 2.4	**230**	10.7 ~ 13.3
120	3.1 ~ 4.0	**260**	12.0 ~ 16.4
160	5.5 ~ 6.5		

*2 Adjusted to customer spec. at manufacturer.

PERFORMANCE CURVES

▸ Regulated Flow as a Function of Valve Pressure Drop for Individual Orifice Diameters

Port 1 → Port 2

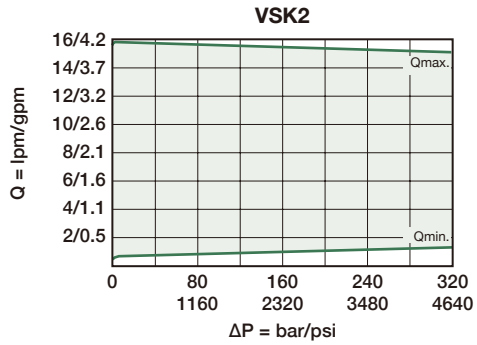

▸ Pressure Drop Related to Flow Rate

Port 2 → Port 1

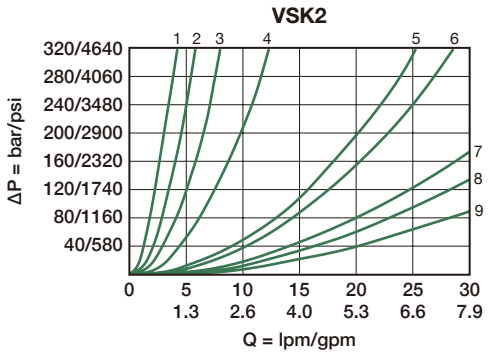

Orifice Diameter (mm/100)					
No.	1	2	3	4	5
Orifice	55	80	100	120	150
No.	6	7	8	9	
Orifice	180	210	230	260	

* 32cSt / 150 ssu oil at 40°C

DIMENSION (UNIT : mm)

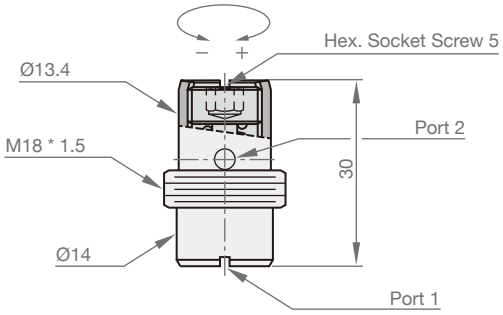

CAVITY TOOLING (UNIT : mm)

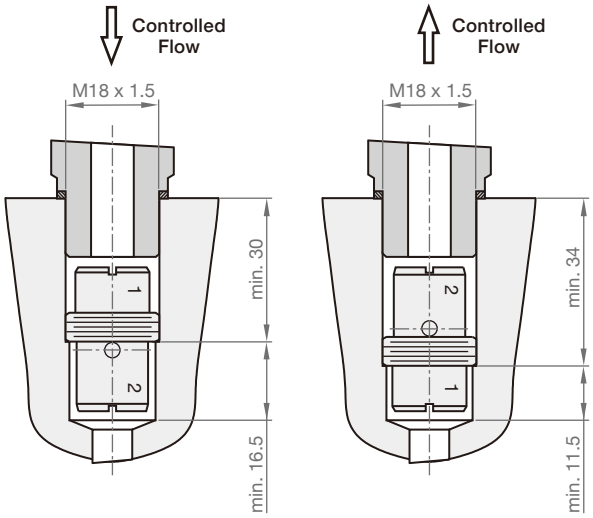

CV04-20



SYMBOLS

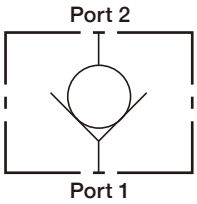

ORDER CODES

CV 04 - B 20 - N - 05

1	Model Name	CV-20	
2	Valve Size	04	
3	Mounting	B	down-hole mount
		none	surface mount
4	Material of Seal	N	buna-N
		V	viton
		E	EPDM
		H	HNBR
		U	polyurethane
5	Bias Spring	05	0.34bar (5psi)

MODEL SPEC.

Model	Cavity	Operating Pressure (bar)	Proof Pressure (bar)	Flow (l/min)	Internal Leakage (cc/min)	Installation Torque (Nm)	Weight (kg)
CV04-B20	SAE-04-2	240	350	5.7	0.10	5.4 ~ 6.7	0.01
CV04-20	SAE-04-2	240	350	5.7	0.10	16 ~ 19	0.01

* Operating temperature : -40 ~ 120°C (-40 ~ 248°F)

PERFORMANCE CURVES

▸ Pressure Drop

Port 1 → Port 2

* 32cSt / 150 ssu oil at 40°C

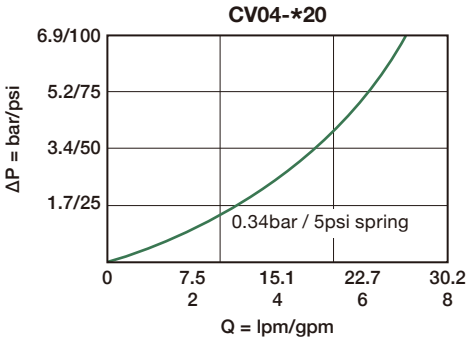

DIMENSION

(UNIT : mm)

▸ CV04-B20

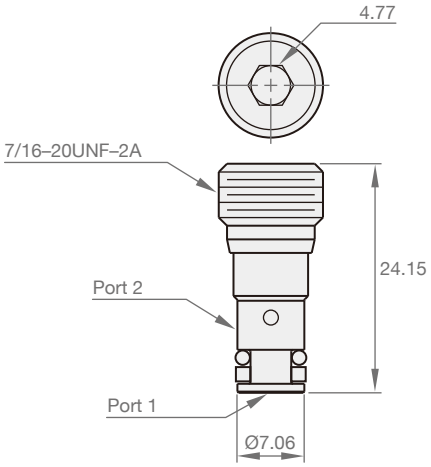

▸ CV04-20

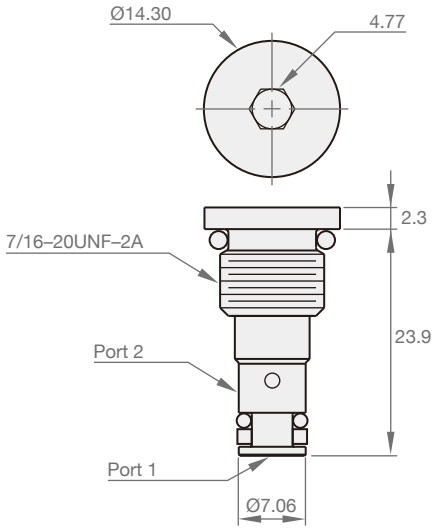

CV-20



SYMBOLS

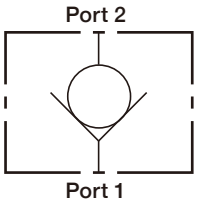

ORDER CODES

CV 08 - 20 - N - 05
(1) (2) (1) (3) (4)

1 ▸	Model Name	CV-20	
2 ▸	Valve Size	08, 10, 12, 16	
3 ▸	Material of Seal	N	buna-N
		V	viton
		E	EPDM
		H	HNBR
		U	polyurethane

4 ▸ Bias Spring

CV08-20		CV10-20		CV12-20		CV16-20	
05	0.34bar (5psi)	05	0.34bar (5psi)	05	0.34bar (5psi)	05	0.34bar (5psi)
30	2.1bar (30psi)	30	2.1bar (30psi)	50	3.5bar (50psi)	50	3.5bar (50psi)
50	3.5bar (50psi)	50	3.5bar (50psi)				
		100	6.9bar (100psi)				

MODEL SPEC.

Model	Cavity	Operating Pressure (bar)	Proof Pressure (bar)	Flow (l/min)	Internal Leakage (cc/min)	Installation Torque (Nm)	Weight (kg)
CV08-20	SAE-08-2	240	350	30	0.10	27.1	0.05
CV10-20	SAE-10-2	240	350	76	0.10	33.9	0.08
CV12-20	SAE-12-2	240	420	95	0.25	47.5	0.17
CV16-20	SAE-16-2	240	350	151	0.25	67.7	0.27

* Operating temperature : -40 ~ 120°C (-40 ~ 248°F)

PERFORMANCE CURVES

▸ Pressure Drop

——— Port 1 → Port 2

– – – – Port 1 → Port 2

* 32cSt / 150 ssu oil at 40°C

CV08-20

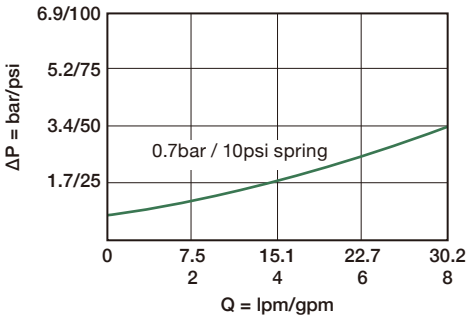

CV10-20

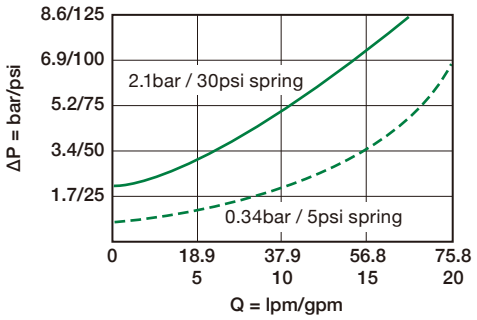

CV12-20

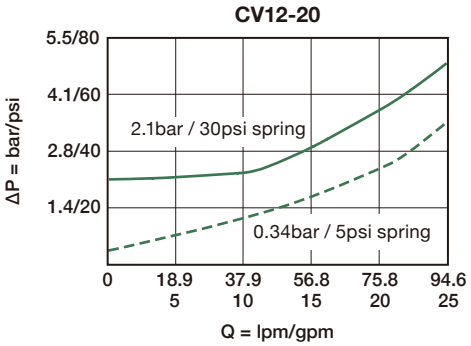

CV16-20

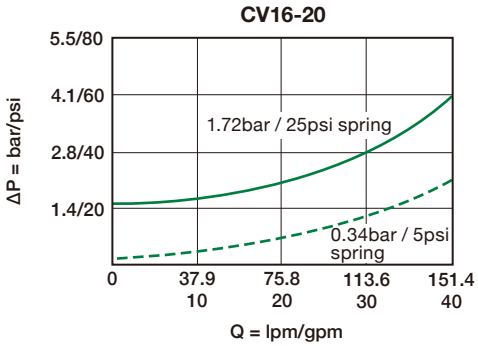

DIMENSION

(UNIT : mm)

▸ CV08-20

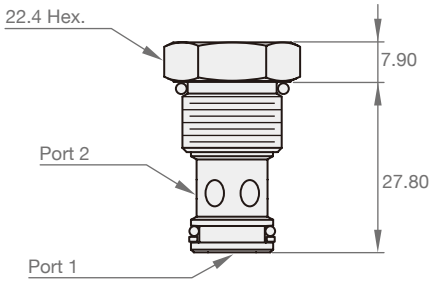

▸ CV10-20

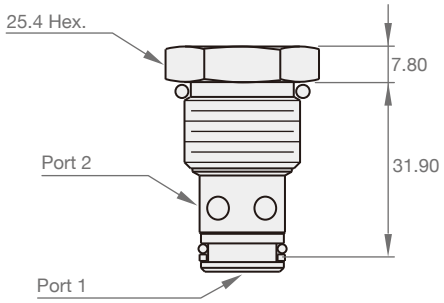

▸ CV12-20

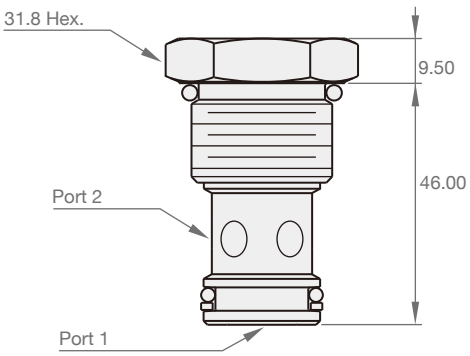

▸ CV16-20

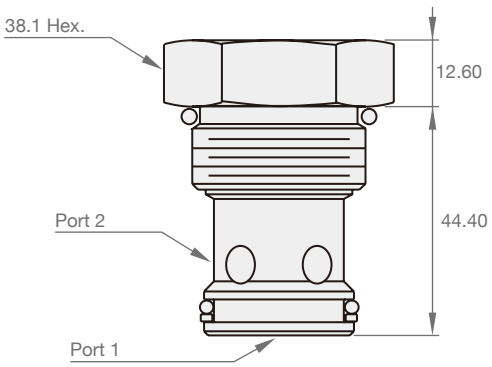

CV-21



SYMBOLS

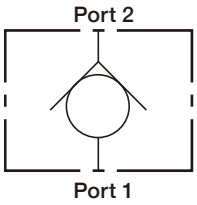

ORDER CODES

CV 10 - 21 - N - 25
(1) (2) (1) (3) (4)

(1) ▸ Model Name	CV-21		
(2) ▸ Valve Size	08, 10, 12		
(3) ▸ Material of Seal	N	buna-N	
	V	viton	
	E	EPDM	
	H	HNBR	
	U	polyurethane	

(4) ▸ Bias Spring

CV08-21		CV10-21		CV12-21	
none		25	1.75bar (25psi)	none	

MODEL SPEC.

Model	Cavity	Operating Pressure (bar)	Proof Pressure (bar)	Flow (l/min)	Internal Leakage (cc/min)	Installation Torque (Nm)	Weight (kg)
CV08-21	SAE-08-2	210	420	30.2	0.25	27.1	0.053
CV10-21	SAE-10-2	210	420	56	0.1	33.9	0.08
CV12-21	SAE-12-2	240	350	113.6	0.25	47.5	0.165

* Operating temperature : -40 ~ 120°C (-40 ~ 248°F)

PERFORMANCE CURVES

▸ Pressure Drop

Port 2 → Port 1

* 32cSt / 150 ssu oil at 40°C

CV08-21

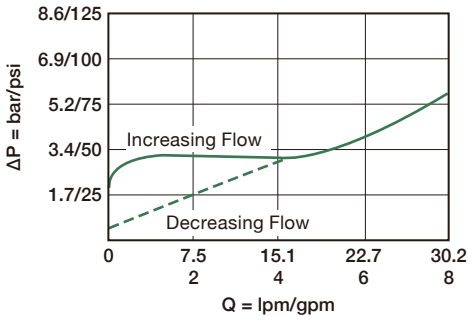

CV10-21

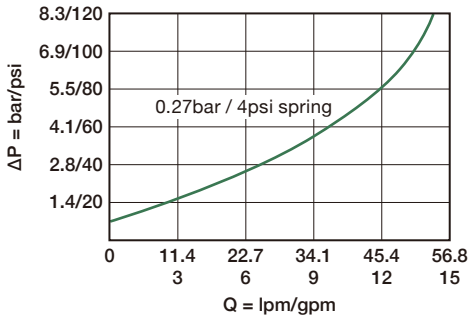

CV12-21

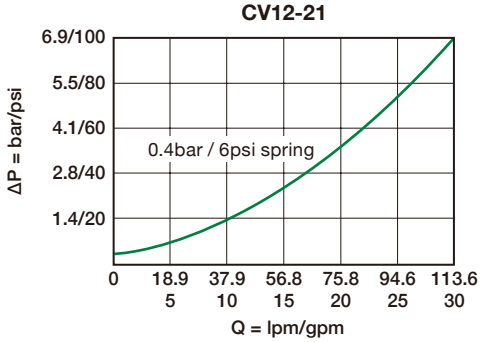

DIMENSION

(UNIT : mm)

▸ CV08-21

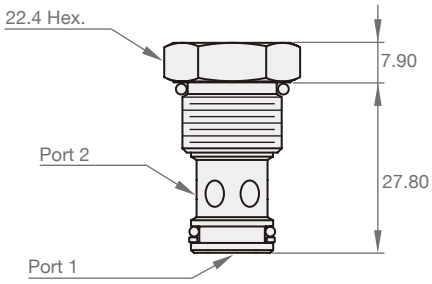

▸ CV10-21

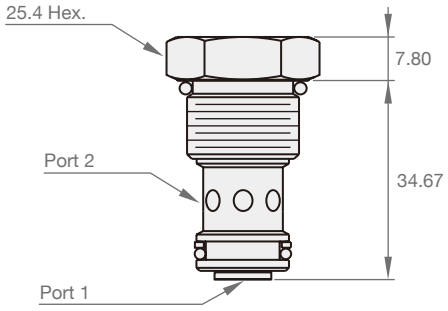

▸ CV12-21

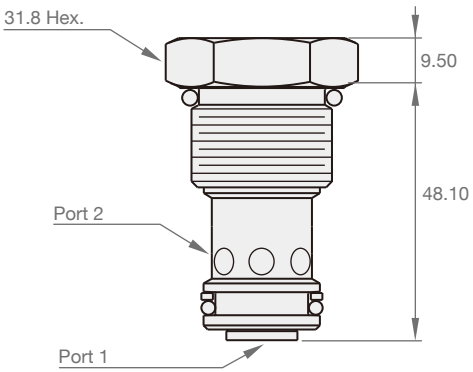

LS-30



SYMBOLS

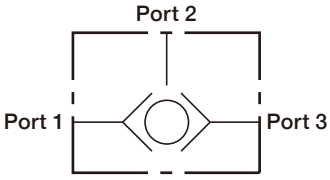

ORDER CODES

LS 08 - 30 - N

1	Model Name	LS04-B30, LS-30	
2	Valve Size	04, 08, 10	
3	Material of Seal	N	buna-N
		V	viton
		E	EPDM
		H	HNBR
		U	polyurethane

MODEL SPEC.

Model	Cavity	Operating Pressure (bar)	Proof Pressure (bar)	Flow (l/min)	Internal Leakage (cc/min)	Installation Torque (Nm)	Weight (kg)
LS04-B30	SAE-04-3	240	350	4.8	0.25	5.4 ~ 6.7	0.01
LS08-30	SAE-08-3	240	390	18.9	0.25	27.1	0.065
LS10-30	SAE-10-3	240	390	30.2	0.25	33.9	0.085

* Operating temperature : -40 ~ 120°C (-40 ~ 248°F)

PERFORMANCE CURVES

▸ Pressure Drop

Port 1 → Port 3 or 2

* 32cSt / 150 ssu oil at 40°C

LS04-B30

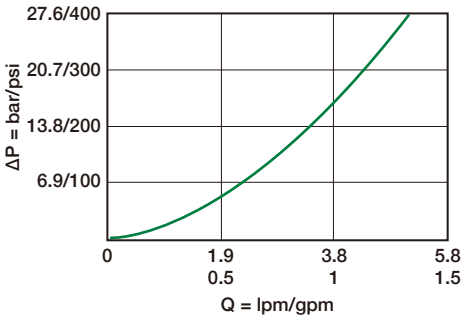

LS08-30

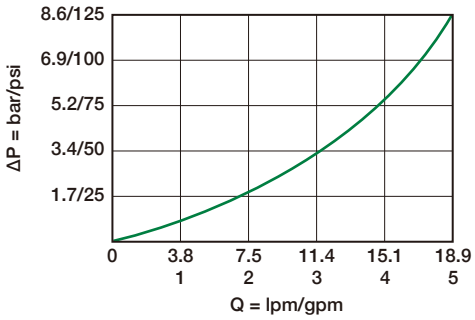

LS10-30

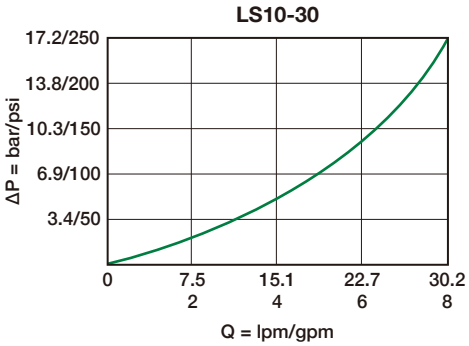

DIMENSION

(UNIT : mm)

▸ LS04-B30

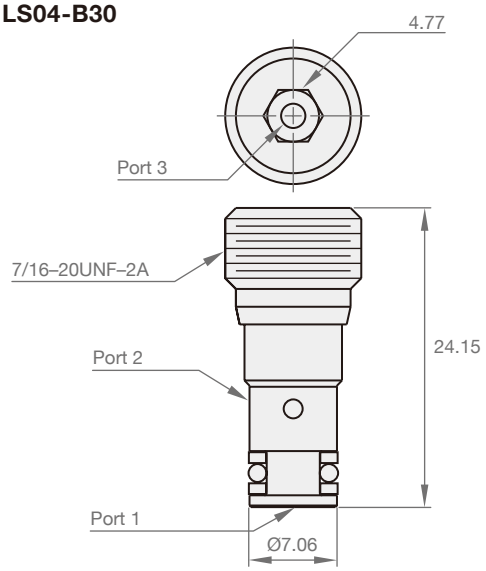

▸ LS08-30

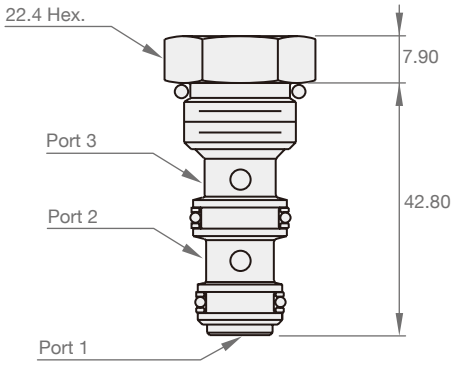

▸ LS10-30

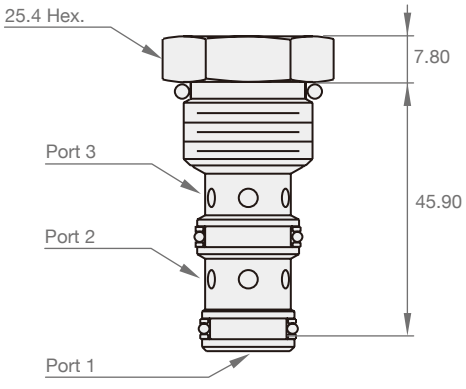

MR-31



SYMBOLS

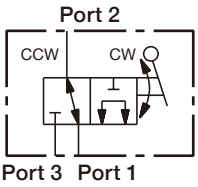

Transition :

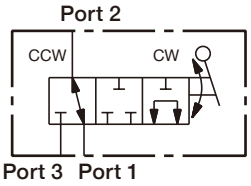

ORDER CODES

MR 10 - 31 - N

1 ▸	Model Name	MR-31	
2 ▸	Valve Size	10	
3 ▸	Material of Seal	N	buna-N
		V	viton
		E	EPDM
		H	HNBR
		U	polyurethane

MODEL SPEC.

Model	Cavity	Operating Pressure (bar)	Proof Pressure (bar)	Flow (l/min)	Internal Leakage (cc/min)	Installation Torque (Nm)	Weight (kg)
MR10-31	SAE-10-3	240	350	37.9	164	33.9	0.14

* Operating temperature : -40 ~ 120°C (-40 ~ 248°F)

PERFORMANCE CURVES

▸ Pressure Drop

——— Port 2 → Port 1

– – – – Port 3 → Port 1

* 32cSt / 150 ssu oil at 40°C

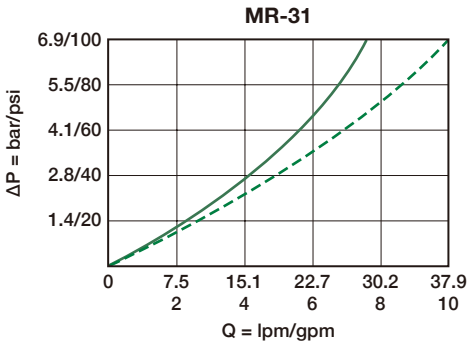

DIMENSION

(UNIT : mm)

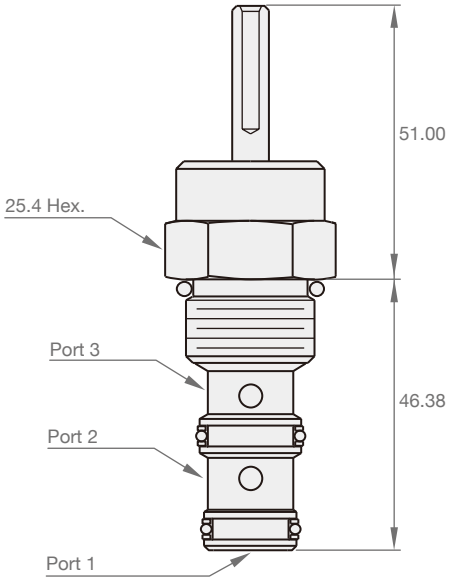

PC-30



SYMBOLS

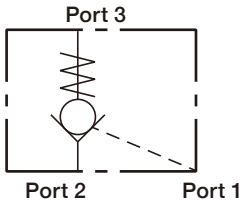

ORDER CODES

PC 08 - 30 - N - 25
1 2 1 3 4

1 ▸	Model Name	PC-30	
2 ▸	Valve Size	08, 10	
3 ▸	Material of Seal	N	buna-N
		V	viton
		E	EPDM
		H	HNBR
		U	polyurethane
4 ▸	Bias Spring (PC08-30)	25	1.7bar (25psi)
		70	4.8bar (70psi)
		90	6.2bar (90psi)
		120	8.2bar (120psi)
		270	18.3bar (270psi)
4 ▸	Bias Spring (PC10-30)	30	2.1bar (30psi)
		70	4.8bar (70psi)
		90	6.2bar (90psi)
		120	8.2bar (120psi)
		270	18.3bar (270psi)

MODEL SPEC.

Model	Cavity	Operating Pressure (bar)	Pilot Ratio	Flow (l/min)	Internal Leakage (cc/min)	Installation Torque (Nm)	Weight (kg)
PC08-30	SAE-08-3	240	3:1	28.3	0.10	27.1	0.065
PC10-30	SAE-10-3	240	4:1	30.2	0.10	33.9	0.090

* Check bias spring : 2.07 bar (30psi)
* Operating temperature : -40 ~ 120°C (-40 ~ 248°F)

PERFORMANCE CURVES

▸ Pressure Drop

Port 3 → Port 2 (p)

Port 2 → Port 3 (r)

* 32cSt / 150 ssu oil at 40°C

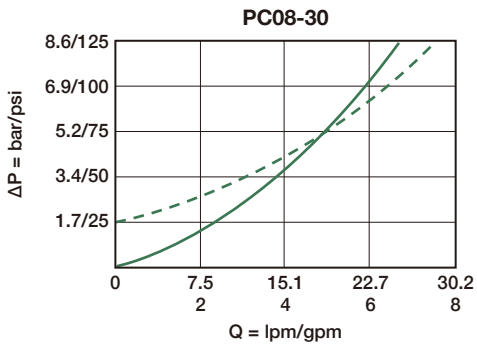

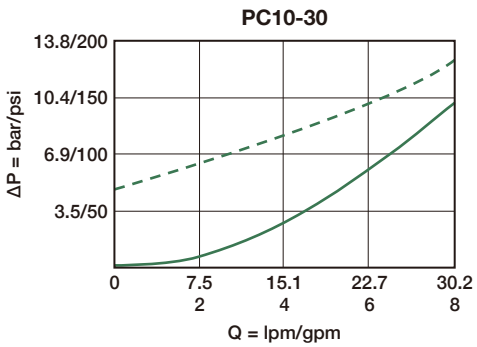

DIMENSION

(UNIT : mm)

▸ PC08-30

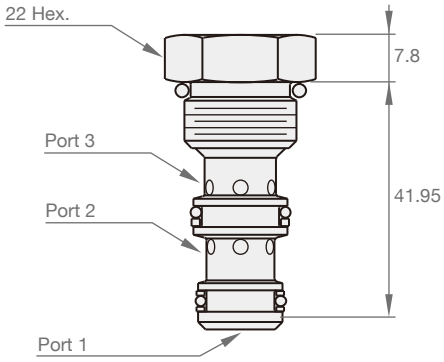

▸ PC10-30

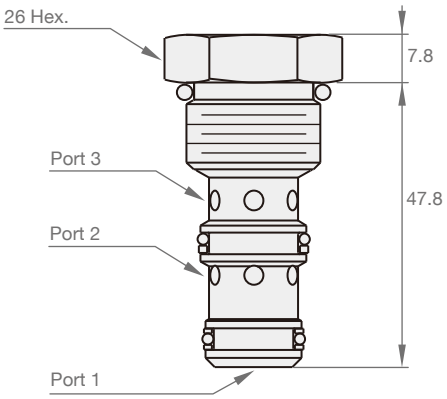

PC-32



SYMBOLS

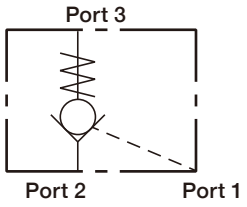

ORDER CODES

PC 10 - 32 - N - 30

1 ▸	Model Name	PC-32	
2 ▸	Valve Size	10	
3 ▸	Material of Seal	N	buna-N
		V	viton
4 ▸	Bias Spring	30	2.1bar (30psi)
		100	6.9bar (100psi)
		E	EPDM
		H	HNBR
		U	polyurethane

MODEL SPEC.

Model	Cavity	Operating Pressure (bar)	Pilot Ratio	Flow (l/min)	Internal Leakage (cc/min)	Installation Torque (Nm)	Weight (kg)
PC10-32	SAE-10-3	240	2:1	30.2	0.25	33.9	0.095

* Check bias spring : 2.07 bar (30psi)
* Operating temperature : -40 ~ 120°C (-40 ~ 248°F)

PERFORMANCE CURVES

▸ Pressure Drop

——— Port 3 → Port 2 (p)

– – – – Port 2 → Port 3 (r)

* 32cSt / 150 ssu oil at 40°C

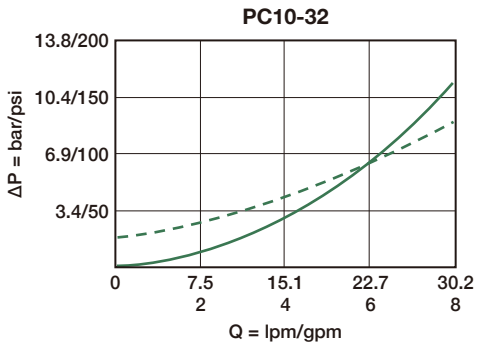

DIMENSION

(UNIT : mm)

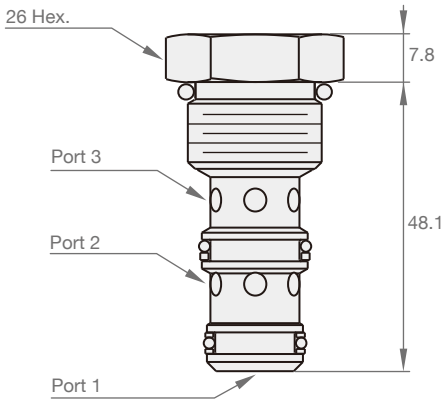

DC-40



SYMBOLS

DC08-40

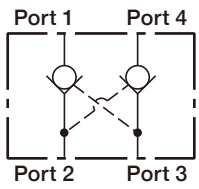

DC10-40

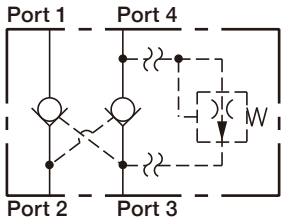

ORDER CODES

DC 08 - 40 - N - 25

1 ▸	Model Name	DC-40	
2 ▸	Valve Size	08, 10	
3 ▸	Material of Seal	N	buna-N
		V	viton
		E	EPDM
		H	HNBR
		U	polyurethane
4 ▸	Bias Spring	25	1.7 bar (2.5 psi)

MODEL SPEC.

Model	Cavity	Operating Pressure (bar)	Flow (l/min)	Pilot Ratio	Internal Leakage (cc/min)	Installation Torque (Nm)	Weight (kg)
DC08-40	SAE-08-4	240	19	3 : 1	0.25	27.1	0.08
DC10-40	SAE-10-4	240	30.3		-	33.9	0.12

* Operating temperature : -40 ~ 120°C (-40 ~ 248°F)

PERFORMANCE CURVES

▸ Pressure Drop

---------- Port 1 → Port 2

– – – – Port 2 → Port 1

— — — Port 4 → Port 3

——— Port 3 → Port 4

* 32cSt / 150 ssu oil at 40°C

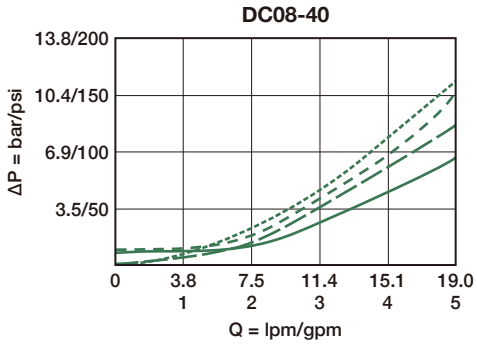

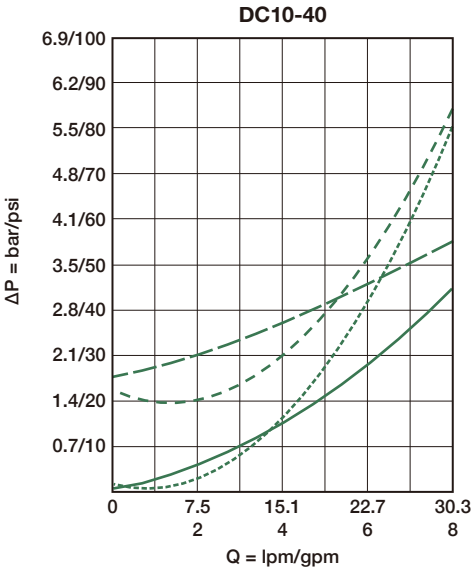

DIMENSION

(UNIT : mm)

▸ DC08-40

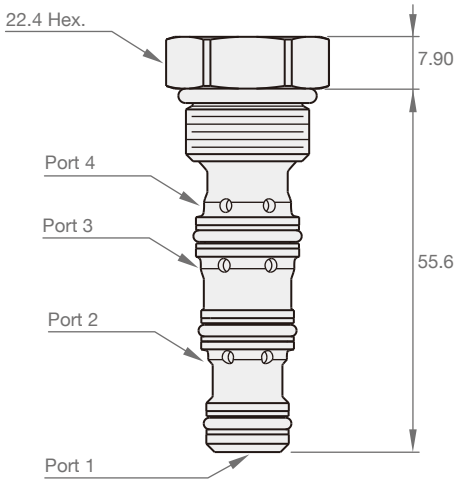

▸ DC10-40

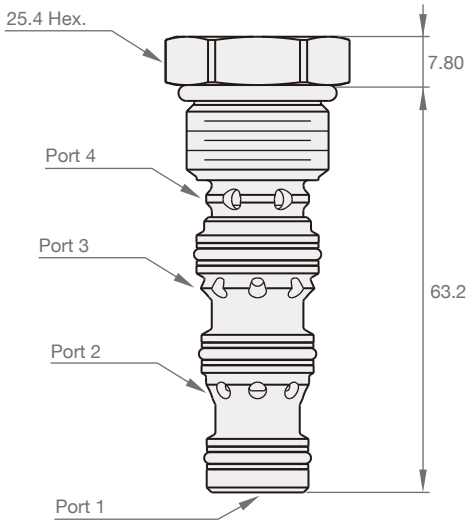

PCS4-10



SYMBOLS

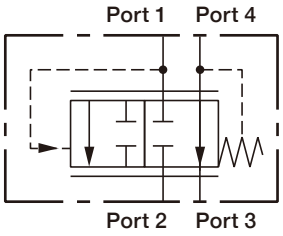

ORDER CODES

PCS4 - 10 - V - 40
1 2 3 4

1 ▸	Model Name	PCS4	
2 ▸	Valve Size	10	
3 ▸	Material of Seal	N	buna-N
		V	viton
		E	EPDM
		H	HNBR
		U	polyurethane
4 ▸	Bias Spring	40	2.8bar (40psi)
		80	5.5bar (80psi)
		160	11.0bar (160psi)

MODEL SPEC.

Model	Cavity	Operating Pressure (bar)	Flow (l/min)	Internal Leakage (cc/min)	Installation Torque (Nm)	Weight (kg)
PCS4-10	SAE-10-4	210	38	82	33.9	0.145

* Operating temperature : -40 ~ 120°C (-40 ~ 248°F)

PERFORMANCE CURVES

▸ Controlled Flow

* 21.8cSt / 150 ssu oil at 49°C

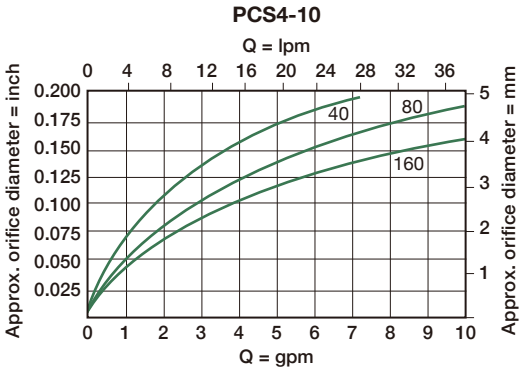

DIMENSION

(UNIT : mm)

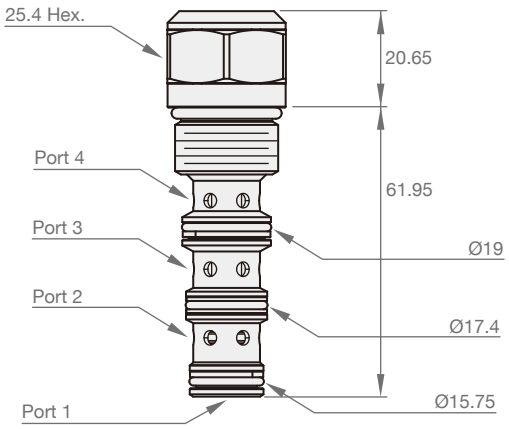

SC-20



SYMBOLS

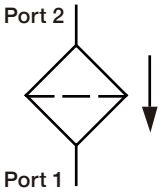

ORDER CODES

SC 08 - 20 - N - 100
1 2 1 3 4

1 ▸	Model Name	SC-20	
2 ▸	Valve Size	08, 10, 12, 16	
3 ▸	Material of Seal	N	buna-N
		V	viton
3 ▸	Filter Rating	100	100um

MODEL SPEC.

Model	Cavity	Flow (l/min / gpm)	Max. Pressure (bar)	Installation Torque (Nm)	Weight (kg)
SC08-20	SAE-08-2	30	240	27.1	0.06
SC10-20	SAE-10-2	76	240	33.9	0.09
SC12-20	SAE-12-2	95	240	47.5	0.18
SC16-20	SAE-16-2	151	240	67.7	0.28

* Operating temperature : -40 ~ 120°C (-40 ~ 248°F)

DIMENSION

(UNIT : mm)

▸ SV08-20

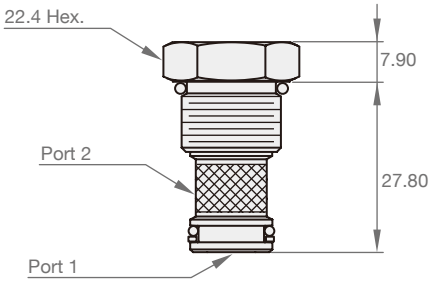

▸ SV10-20

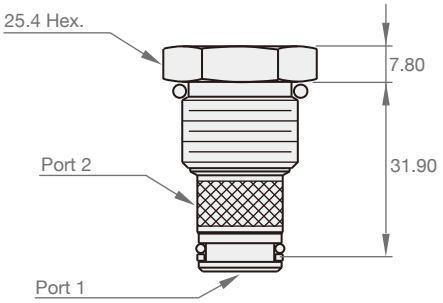

▸ SV12-20

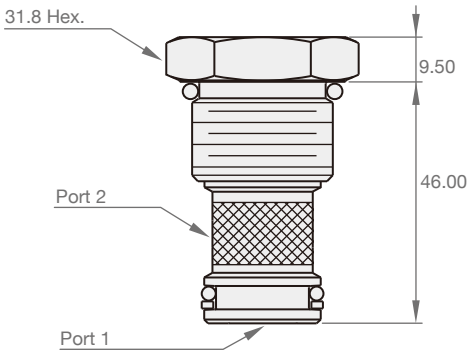

▸ SV16-20

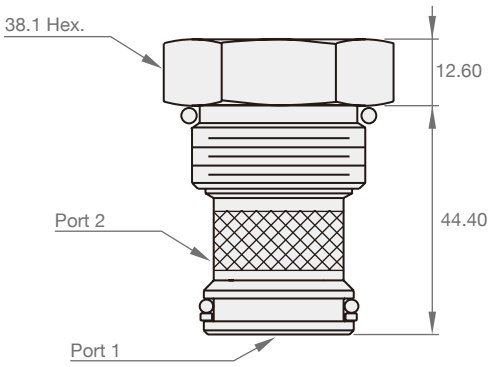

CF10



SYMBOLS

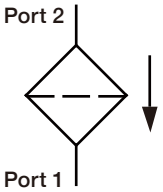

ORDER CODES

CF 10 - 40 - N

1	Model Name	CF	
2	Valve Size	10	
3	Filter Rating	25	25um (surface type)
		40	40um (surface type)
4	Material of Seal	N	buna-N
		V	viton

MODEL SPEC.

Model	Cavity	Flow (l/min / gpm)	Max. Pressure (bar / psi)	Installation Torque (Nm)	Weight (kg)
CF10	SAE-10-2	37.9 / 10	345 / 5000	40/50	0.14

* Operating temperature : -35 ~ 100°C (-31 ~ 212°F)

PERFORMANCE CURVES

Typical Pressure Differential vs. Flow

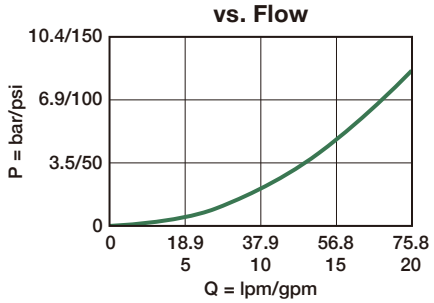

Typical Pressure Differential vs. Contaminant Added

Per ISO 4405

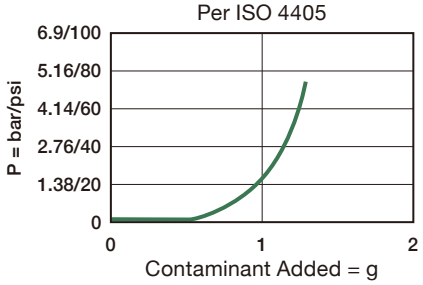

DIMENSION

(UNIT : mm)

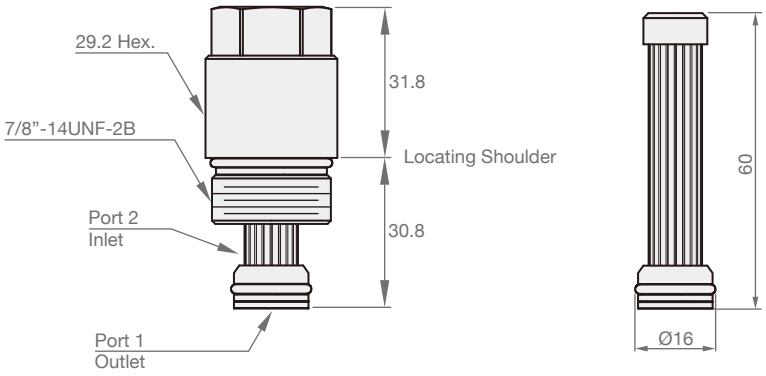

CF12



SYMBOLS

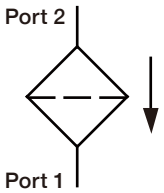

ORDER CODES

CF 12 - 40 - N

1 2 3 4

1 ▸	Model Name	CF	
2 ▸	Valve Size	12	
3 ▸	Filter Rating	25	25um (surface type)
		40	40um (surface type)
4 ▸	Material of Seal	N	buna-N
		V	viton

MODEL SPEC.

Model	Cavity	Flow (l/min / gpm)	Max. Pressure (bar / psi)	Installation Torque (Nm)	Weight (kg)
CF12	SAE-12-2	75.7 / 20	350 / 5076	40/50	0.25

* Operating temperature : -35 ~ 100°C (-31 ~ 212°F)

PERFORMANCE CURVES

Typical Pressure Differential vs. Contaminant Added

Per ISO 4405

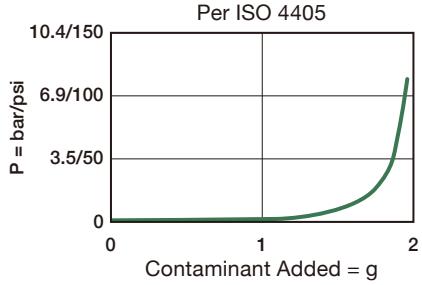

DIMENSION

(UNIT : mm)

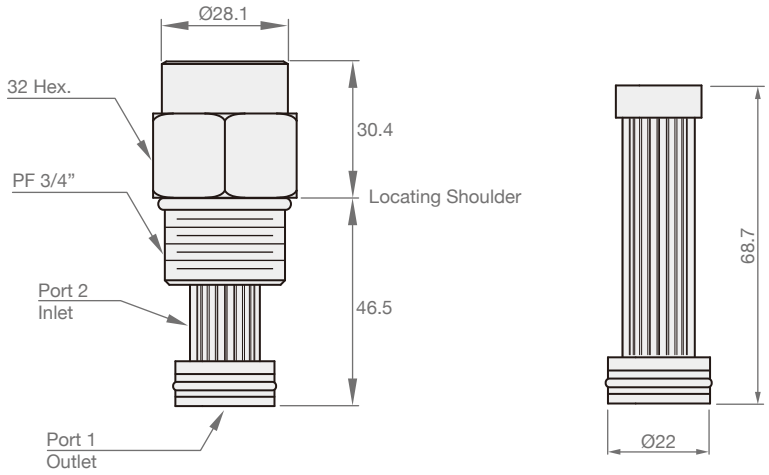

Steed Machinery Co., Ltd.

No. 28, Ruiguang St., South Dist.,
Taichung City 402006,
Taiwan
Tel : +886-4-2285-4867
Fax : +886-4-2285-2848
Email : info@steedmachinery.com.tw

more information
www.steedmachinery.com.tw

STEED
HYDRAULIC TECHNOLOGY

© Steed Machinery Co., Ltd. All rights reserved.

* We reserve the right to make changes without notice
in the course of continued development.